9 PİSTONLU YÜKSEK BASINÇ POMPA 85 LT - 105

9 PISTON HIGH PRESSURE PUMP 85 LT - 105

85 LT KODU / CODE: 16170851369 SAĞ CW - SOL CCW
105 LT KODU / CODE: 16171051369 SAĞ CW - SOL CCW

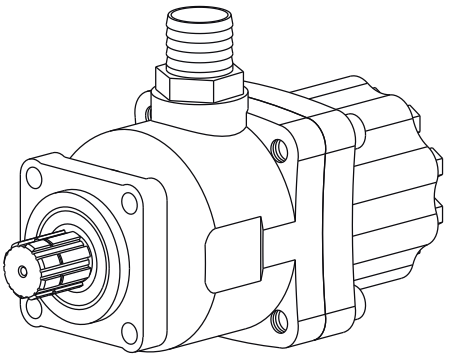

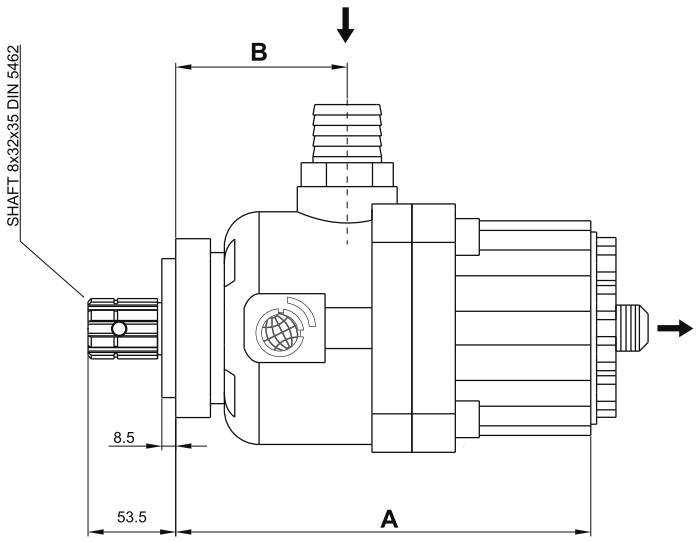

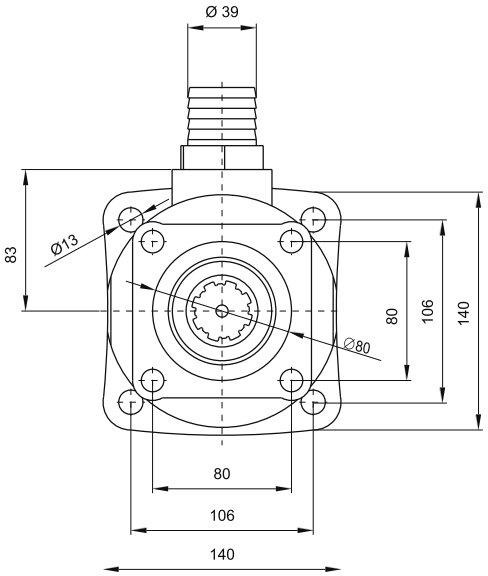

GENEL BİLGİLER/ GENERAL DATA

POMPA KODU PUMP CODE	İLETİM HACMİ DISPLACEMENT CM/REV	MAX. BASINÇ MAX. PRESSURE	MAX. HIZ MAX. SPEED	A mm	B mm	GİRİŞ INLET	ÇIKIŞ OUTLET	AĞIRLIK WEIGHT KG
16170851369 16171051369	85 LT 105 LT	300 Bar 300 Bar	1200 1200	240 240	100 100	R1"1/4	R1"	19 KG