9 PİSTONLU POMPA 85 LT - 105

9 PISTON PUMP 85 LT - 105

85 LT KODU / CODE: 16120851369 SAĞ CW - SOL CCW
105 LT KODU / CODE: 16121051369 SAĞ CW - SOL CCW

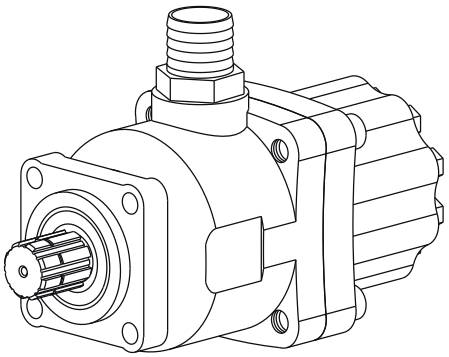

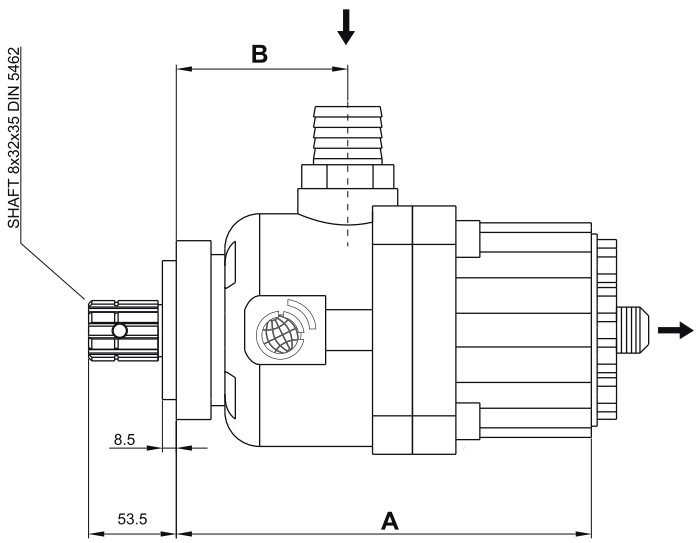

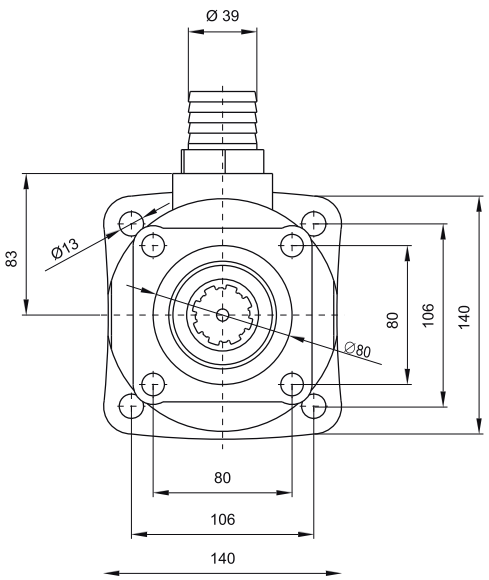

GENEL BİLGİLER/ GENERAL DATA

POMPA KODU PUMP CODE	İLETİM HACMİ DISPLACEMENT CM/REV	MAX. BASINÇ MAX. PRESSURE	MAX. HIZ MAX. SPEED	A mm	B mm	GİRİŞ INLET	ÇIKIŞ OUTLET	AĞIRLIK WEIGHT KG
16120851369 16121051369	85 LT 105 LT	200 Bar 200 Bar	1200 1200	240 240	100 100	R1" 1/4	R1"	18 KG