10 PİSTONLU YÜKSEK BASINÇ POMPA 90 LT - 115

10 PISTON HIGH PRESSURE PUMP 90 LT - 115

90 LT KODU / CODE: 16180900369 SAĞ CW - SOL CCW
105 LT KODU / CODE: 16181150369 SAĞ CW - SOL CCW

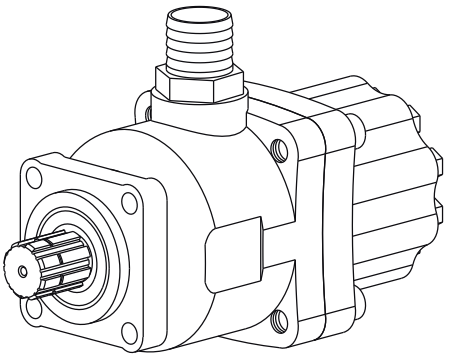

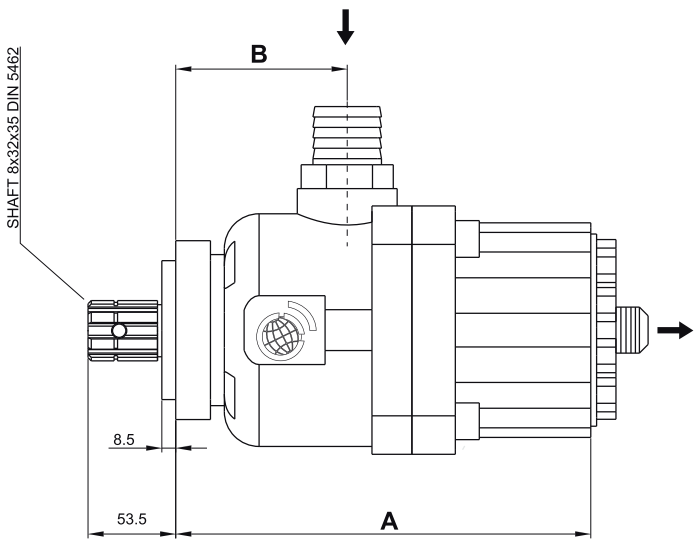

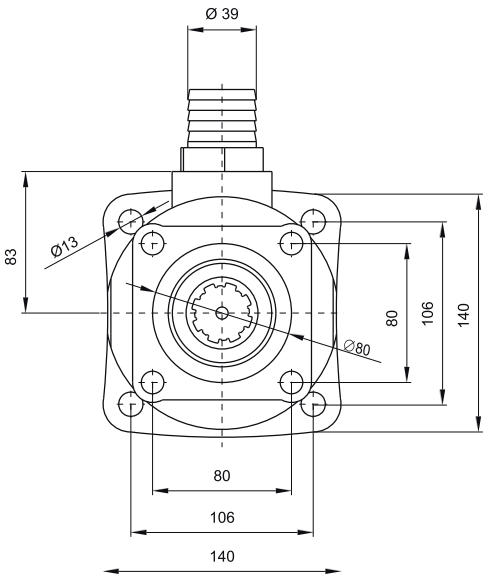

GENEL BİLGİLER/ GENERAL DATA

POMPA KODU PUMP CODE	İLETİM HACMİ DISPLACEMENT CM/REV	MAX. BASINÇ MAX. PRESSURE	MAX. HIZ MAX. SPEED	A mm	B mm	GİRİŞ INLET	ÇIKIŞ OUTLET	AĞIRLIK WEIGHT KG
16180900369 16181150369	90 LT 115 LT	300 Bar 300 Bar	1200 1200	240 240	100 100	R1" 1/4	R1"	23 KG